TAYLOR BUILDING / ZONING DEPARTMENT
425 Papermill Rd. - P.O. Box 158
Taylor AZ. 85937
Phone (928) 536-7366

Residential Accessory Structure Handout

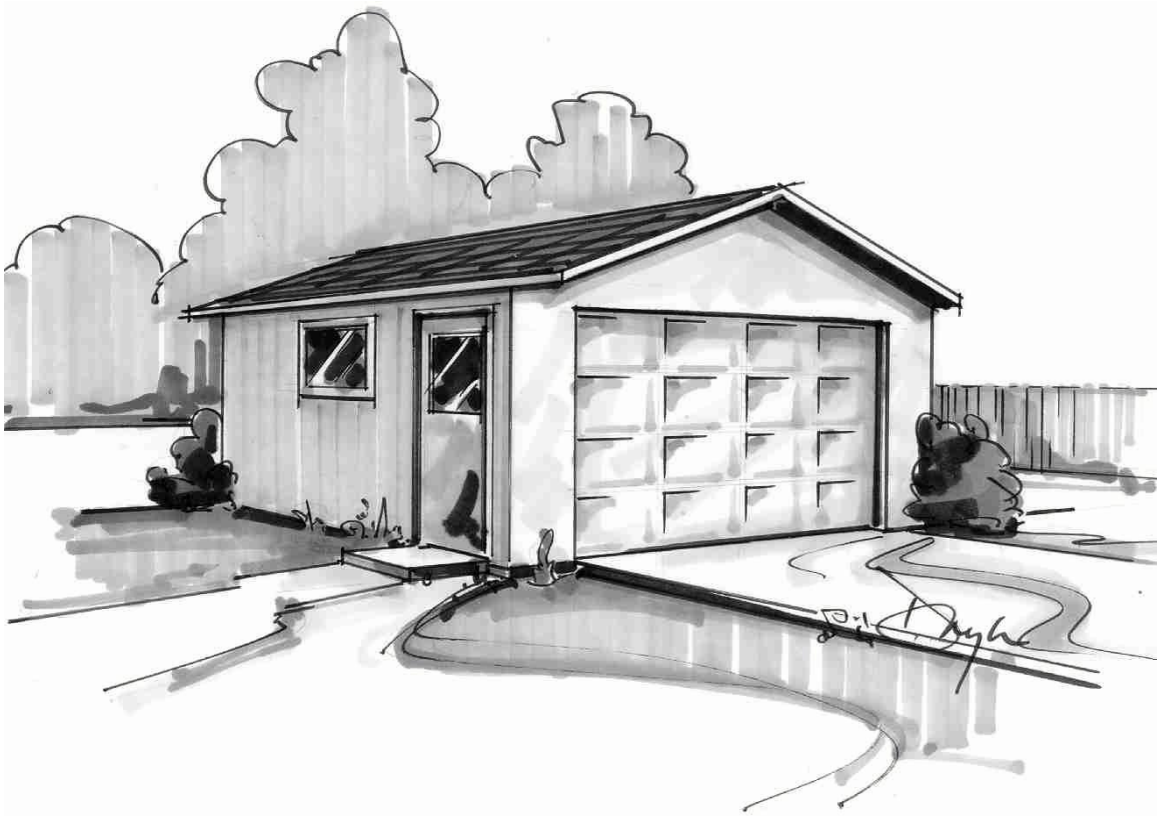

What Requires a Permit?

1. Any change, addition, and/or deletion of a room or building requires a permit.
2. Any enclosure of a carport, garage, or patio requires a permit.
3. To construct, enlarge, alter, repair, move, demolish, or change the occupancy of a building or structure requires a permit.
4. To erect, install, enlarge, alter, repair, remove, convert, replace any electrical, gas, mechanical or plumbing system requires a permit.
5. Any detached structure that is over 200 square feet, regardless of use, requires a permit.
6. Note that there is NO exception for temporary / moveable structures.

The step by step process

1. Check with the planning & zoning department for lot coverage, setback requirements and maximum building height for your area. If you are in an area with an H.O.A. (Home Owners Association) or CC&R's it is your responsibility to satisfy any requirements they may have.
2. Provide 2 Site Plans showing dimensions of your project or addition and its relationship to <u>all</u> existing buildings, utilities, septic systems, easements or other structures on the property and the distance to existing property lines, drawn to scale. See sample below:

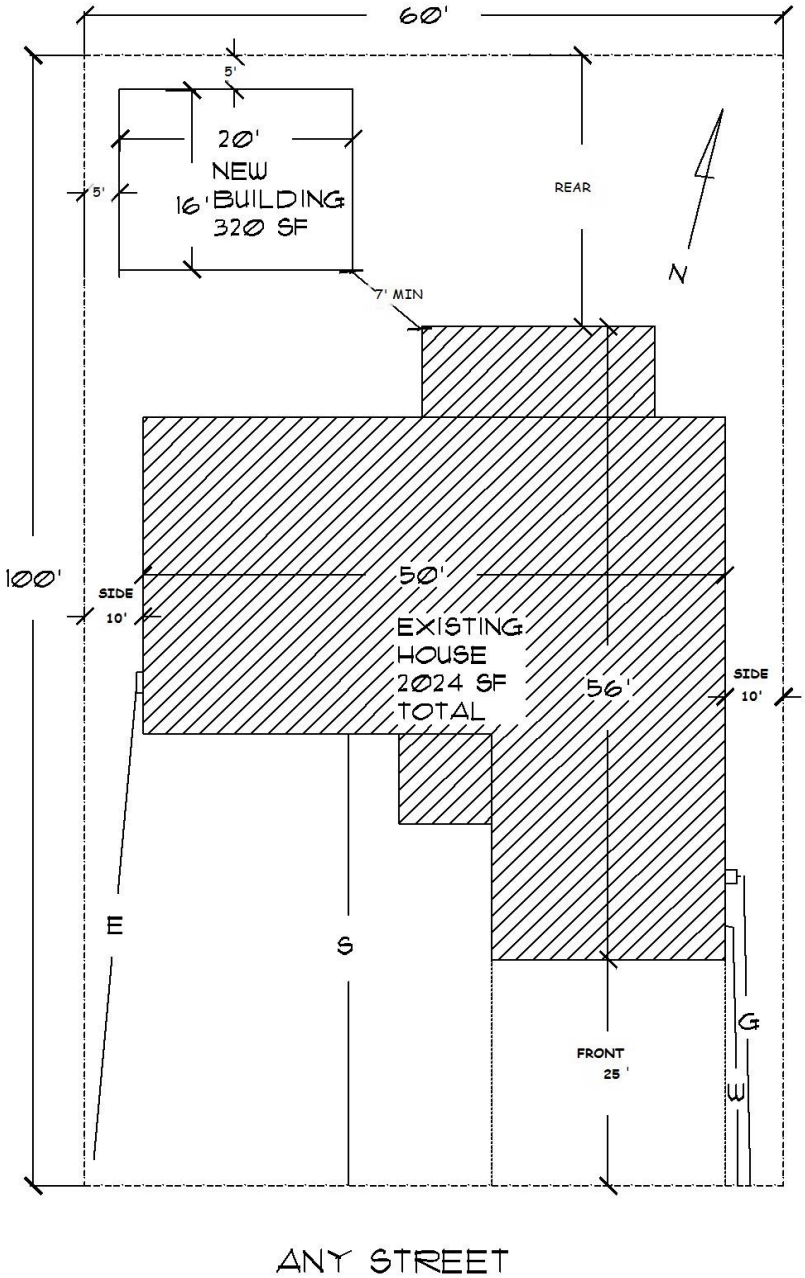

SITE PLAN

INCLUDE THE FOLLOWING:
1. FOOTPRINT OF ALL BUILDINGS
2. SETBACK LINES (SEE ZONE SPECIFIC REQUIREMENTS)
3. LOT DIMENSIONS
4. DIMENSIONS OF BUILDINGS AND DISTANCES BETWEEN BUILDINGS AND TO ALL PROPERTY LINES
5. AREA OF EACH BUILDING
6. LOT COVERAGE CALCULATIONS
7. UTILITIES
8. ANY POOLS OR SPAS
9. NORTH ARROW
10. SCALE

TO CALCULATE ALLOWABLE LOT COVERAGE:

AREA OF LOT
× PERCENTAGE ALLOWABLE/100
= MAXIMUM LOT COVERAGE AREA
- AREA OF EXISTING BUILDINGS
= MAXIMUM ALLOWABLE AREA OF NEW BUILDING

THIS EXAMPLE

6000
× 40%/100
=2400
-2024
=376
PROPOSED NEW BUILDING 320 SF IS LESS THAN 376
NEW BUILDING AREA IS ACCEPTABLE

3. Provide a floor plan (2 copies). The sample below can be used for a simple building by filling in the blanks:

Easy Plan

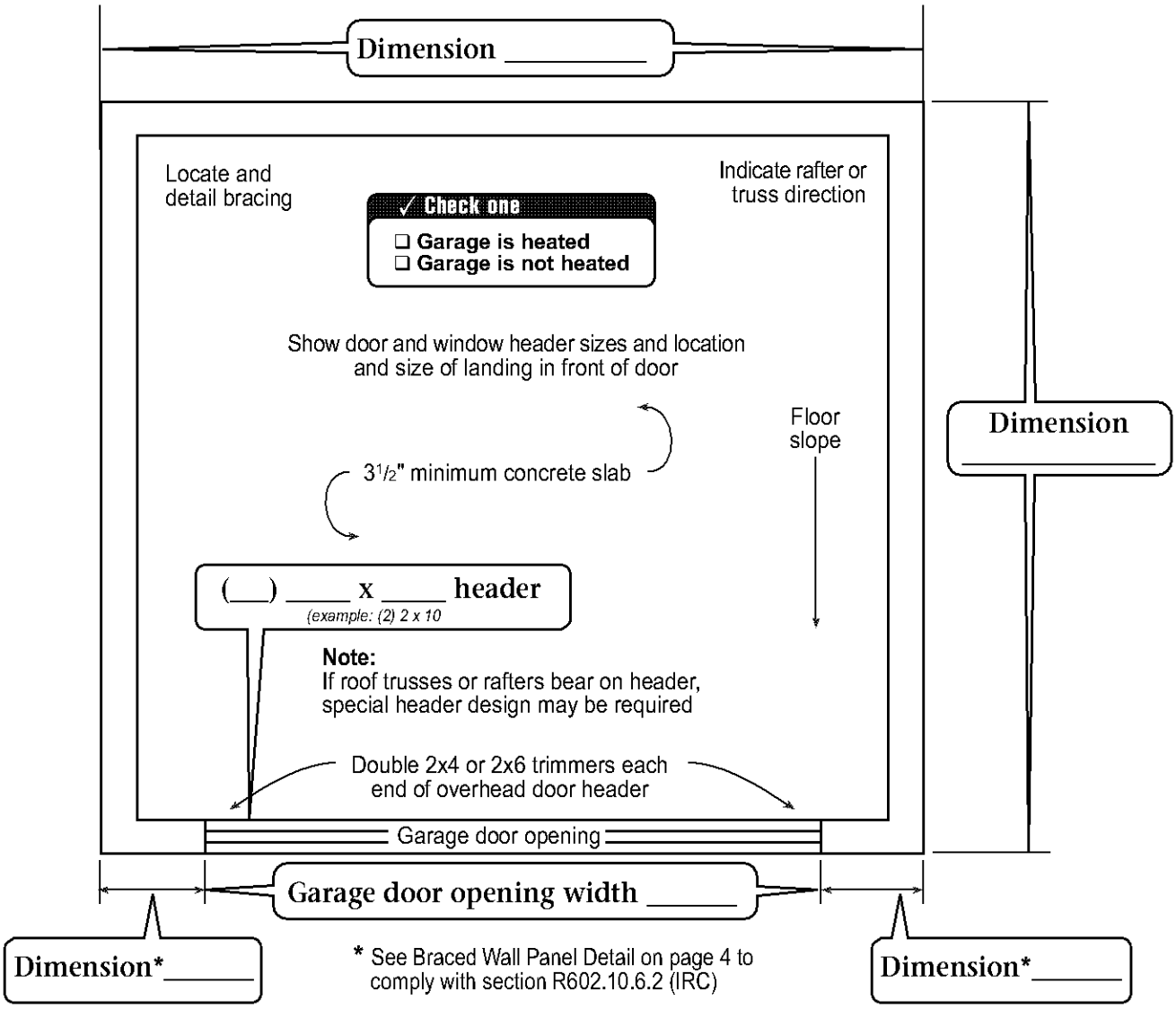

4. Provide a building & foundation section & detail plan (2 copies). The sample below can be used for a simple building by filling in the blanks:

Easy Plan (Maximum wall height 10') (maximum building height per zoning requirements)

Note: For roofs with slopes less than 4:12, follow manufacturer's instructions for low slope application of roofing material.

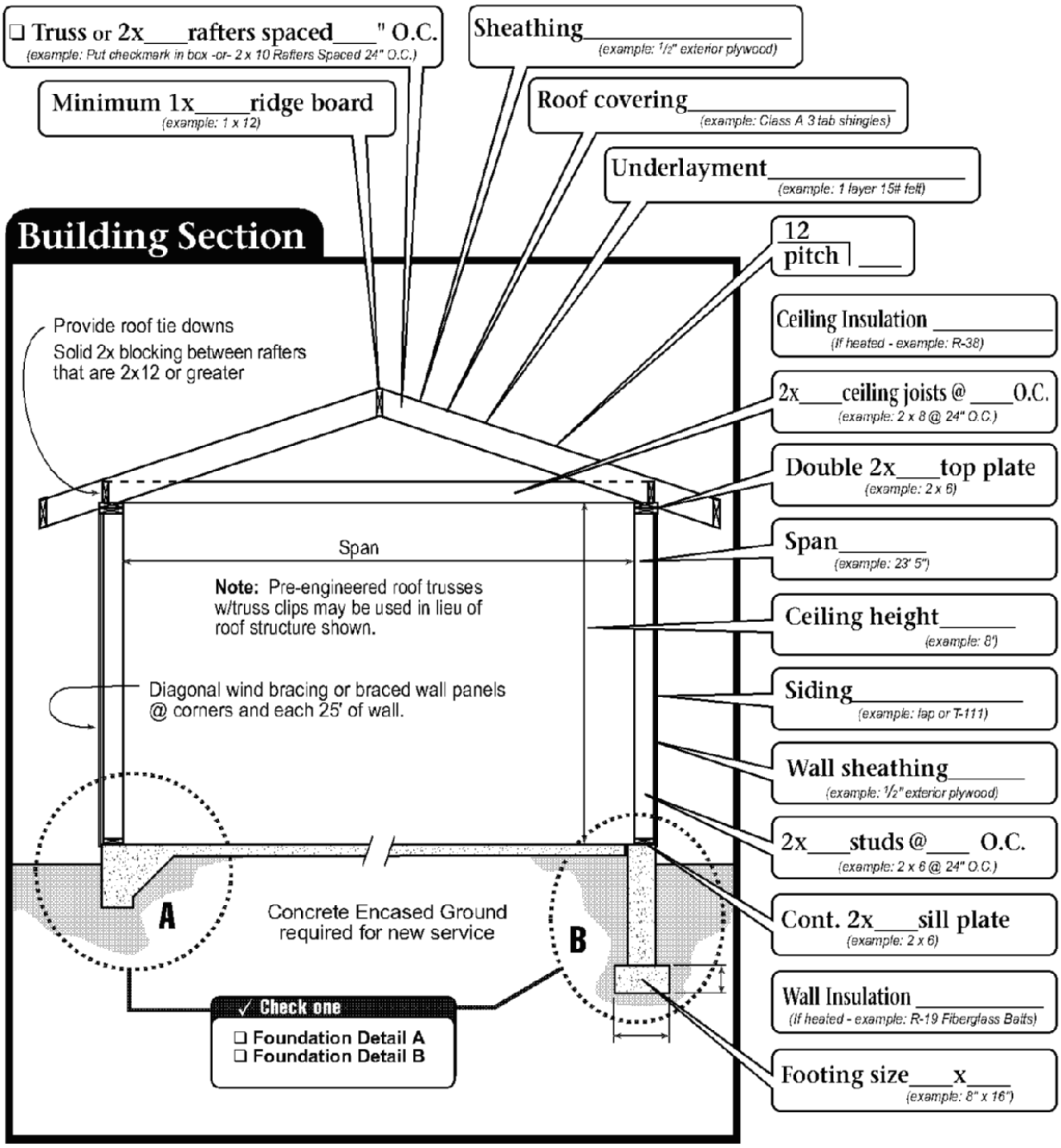

Manufactured trusses may be substituted for roof rafters and ceiling joists.

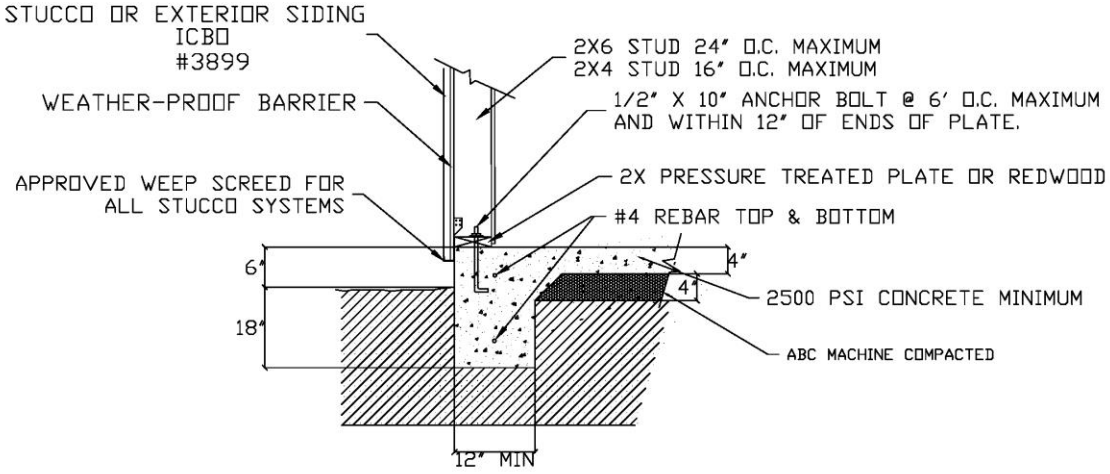

DETAIL A

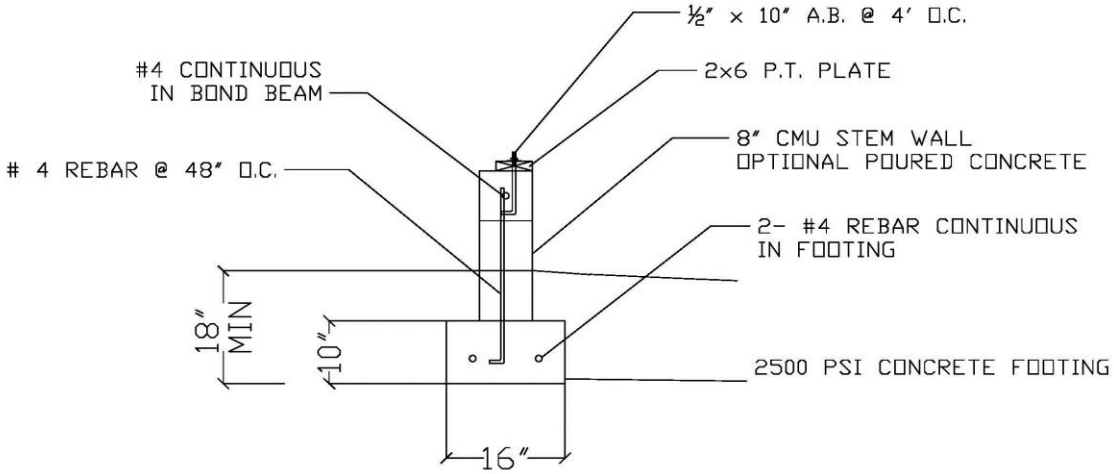

DETAIL B

RAFTER SPAN TABLE

TABLE R802.5.1(5)
RAFTER SPANS FOR COMMON LUMBER SPECIES
(Ground snow load=30 psf, ceiling attached to rafters, L/Δ = 240)

RAFTER SPACING (Inches)	SPECIES AND GRADE		DEAD LOAD = 10 psf					DEAD LOAD = 20 psf				
			2 × 4	2 × 6	2 × 8	2 × 10	2 × 12	2 × 4	2 × 6	2 × 8	2 × 10	2 × 12
			Maximum rafter spans[a]									
			(feet - inches)	(feet - inches)	(feet - inches)	(feet - inches)	(feet - inches)	(feet - inches)	(feet - inches)	(feet - inches)	(feet - inches)	(feet - inches)
12	Douglas fir-larch	SS	9-1	14-4	18-10	24-1	Note b	9-1	14-4	18-10	24-1	Note b
	Douglas fir-larch	#1	8-9	13-9	18-2	22-9	Note b	8-9	13-2	16-8	20-4	23-7
	Douglas fir-larch	#2	8-7	13-6	17-5	21-4	24-8	8-5	12-4	15-7	19-1	22-1
	Douglas fir-larch	#3	7-1	10-5	13-2	16-1	18-8	6-4	9-4	11-9	14-5	16-8
	Hem-fir	SS	8-7	13-6	17-10	22-9	Note b	8-7	13-6	17-10	22-9	Note b
	Hem-fir	#1	8-5	13-3	17-5	22-2	25-9	8-5	12-10	16-3	19-10	23-0
	Hem-fir	#2	8-0	12-7	16-7	21-0	24-4	8-0	12-2	15-4	18-9	21-9
	Hem-fir	#3	7-1	10-5	13-2	16-1	18-8	6-4	9-4	11-9	14-5	16-8
	Southern pine	SS	8-11	14-1	18-6	23-8	Note b	8-11	14-1	18-6	23-8	Note b
	Southern pine	#1	8-9	13-9	18-2	23-2	Note b	8-9	13-9	18-2	22-2	Note b
	Southern pine	#2	8-7	13-6	17-10	22-3	Note b	8-7	12-11	16-8	19-11	23-4
	Southern pine	#3	7-7	11-2	14-3	16-10	20-0	6-9	10-0	12-9	15-1	17-11
	Spruce-pine-fir	SS	8-5	13-3	17-5	22-3	Note b	8-5	13-3	17-5	22-3	Note b
	Spruce-pine-fir	#1	8-3	12-11	17-0	21-4	24-8	8-3	12-4	15-7	19-1	22-1
	Spruce-pine-fir	#2	8-3	12-11	17-0	21-4	24-8	8-3	12-4	15-7	19-1	22-1
	Spruce-pine-fir	#3	7-1	10-5	13-2	16-1	18-8	6-4	9-4	11-9	14-5	16-8
16	Douglas fir-larch	SS	8-3	13-0	17-2	21-10	Note b	8-3	13-0	17-2	21-3	24-8
	Douglas fir-larch	#1	8-0	12-6	16-2	19-9	22-10	7-10	11-5	14-5	17-8	20-5
	Douglas fir-larch	#2	7-10	11-11	15-1	18-5	21-5	7-3	10-8	13-6	16-6	19-2
	Douglas fir-larch	#3	6-2	9-0	11-5	13-11	16-2	5-6	8-1	10-3	12-6	14-6
	Hem-fir	SS	7-10	12-3	16-2	20-8	25-1	7-10	12-3	16-2	20-8	24-2
	Hem-fir	#1	7-8	12-0	15-9	19-3	22-3	7-7	11-1	14-1	17-2	19-11
	Hem-fir	#2	7-3	11-5	14-11	18-2	21-1	7-2	10-6	13-4	16-3	18-10
	Hem-fir	#3	6-2	9-0	11-5	13-11	16-2	5-6	8-1	10-3	12-6	14-6
	Southern pine	SS	8-1	12-9	16-10	21-6	Note b	8-1	12-9	16-10	21-6	Note b
	Southern pine	#1	8-0	12-6	16-6	21-1	25-7	8-0	12-6	16-2	19-2	22-10
	Southern pine	#2	7-10	12-3	16-2	19-3	22-7	7-10	11-2	14-5	17-3	20-2
	Southern pine	#3	6-7	9-8	12-4	14-7	17-4	5-10	8-8	11-0	13-0	15-6
	Spruce-pine-fir	SS	7-8	12-0	15-10	20-2	24-7	7-8	12-0	15-10	19-9	22-10
	Spruce-pine-fir	#1	7-6	11-9	15-1	18-5	21-5	7-3	10-8	13-6	16-6	19-2
	Spruce-pine-fir	#2	7-6	11-9	15-1	18-5	21-5	7-3	10-8	13-6	16-6	19-2
	Spruce-pine-fir	#3	6-2	9-0	11-5	13-11	16-2	5-6	8-1	10-3	12-6	14-6
19.2	Douglas fir-larch	SS	7-9	12-3	16-1	20-7	25-0	7-9	12-3	15-10	19-5	22-6
	Douglas fir-larch	#1	7-6	11-8	14-9	18-0	20-11	7-1	10-5	13-2	16-1	18-8
	Douglas fir-larch	#2	7-4	10-11	13-9	16-10	19-6	6-8	9-9	12-4	15-1	17-6
	Douglas fir-larch	#3	5-7	8-3	10-5	12-9	14-9	5-0	7-4	9-4	11-5	13-2
	Hem-fir	SS	7-4	11-7	15-3	19-5	23-7	7-4	11-7	15-3	19-1	22-1
	Hem-fir	#1	7-2	11-4	14-4	17-7	20-4	6-11	10-2	12-10	15-8	18-2
	Hem-fir	#2	6-10	10-9	13-7	16-7	19-3	6-7	9-7	12-2	14-10	17-3
	Hem-fir	#3	5-7	8-3	10-5	12-9	14-9	5-0	7-4	9-4	11-5	13-2
	Southern pine	SS	7-8	12-0	15-10	20-2	24-7	7-8	12-0	15-10	20-2	24-7
	Southern pine	#1	7-6	11-9	15-6	19-7	23-4	7-6	11-9	14-9	17-6	20-11
	Southern pine	#2	7-4	11-5	14-9	17-7	20-7	7-1	10-2	13-2	15-9	18-5
	Southern pine	#3	6-0	8-10	11-3	13-4	15-10	5-4	7-11	10-1	11-11	14-2
	Spruce-pine-fir	SS	7-2	11-4	14-11	19-0	23-1	7-2	11-4	14-9	18-0	20-11
	Spruce-pine-fir	#1	7-0	10-11	13-9	16-10	19-6	6-8	9-9	12-4	15-1	17-6
	Spruce-pine-fir	#2	7-0	10-11	13-9	16-10	19-6	6-8	9-9	12-4	15-1	17-6
	Spruce-pine-fir	#3	5-7	8-3	10-5	12-9	14-9	5-0	7-4	9-4	11-5	13-2

TABLE R802.5.1(5)—continued
RAFTER SPANS FOR COMMON LUMBER SPECIES
(Ground snow load=30 psf, ceiling attached to rafters, L/Δ = 240)

RAFTER SPACING (Inches)	SPECIES AND GRADE		DEAD LOAD = 10 psf					DEAD LOAD = 20 psf				
			2 × 4	2 × 6	2 × 8	2 × 10	2 × 12	2 × 4	2 × 6	2 × 8	2 × 10	2 × 12
			Maximum rafter spans[a]									
			(feet-inches)	(feet-inches)	(feet-inches)	(feet-inches)	(feet-inches)	(feet-inches)	(feet-inches)	(feet-inches)	(feet-inches)	(feet-inches)
24	Douglas fir-larch	SS	7-3	11-4	15-0	19-1	22-6	7-3	11-3	14-2	17-4	20-1
	Douglas fir-larch	#1	7-0	10-5	13-2	16-1	18-8	6-4	9-4	11-9	14-5	16-8
	Douglas fir-larch	#2	6-8	9-9	12-4	15-1	17-6	5-11	8-8	11-0	13-6	15-7
	Douglas fir-larch	#3	5-0	7-4	9-4	11-5	13-2	4-6	6-7	8-4	10-2	11-10
	Hem-fir	SS	6-10	10-9	14-2	18-0	21-11	6-10	10-9	13-11	17-0	19-9
	Hem-fir	#1	6-8	10-2	12-10	15-8	18-2	6-2	9-1	11-6	14-0	16-3
	Hem-fir	#2	6-4	9-7	12-2	14-10	17-3	5-10	8-7	10-10	13-3	15-5
	Hem-fir	#3	5-0	7-4	9-4	11-5	13-2	4-6	6-7	8-4	10-2	11-10
	Southern pine	SS	7-1	11-2	14-8	18-9	22-10	7-1	11-2	14-8	18-9	22-10
	Southern pine	#1	7-0	10-11	14-5	17-6	20-11	7-0	10-6	13-2	15-8	18-8
	Southern pine	#2	6-10	10-2	13-2	15-9	18-5	6-4	9-2	11-9	14-1	16-6
	Southern pine	#3	5-4	7-11	10-1	11-11	14-2	4-9	7-1	9-0	10-8	12-8
	Spruce-pine-fir	SS	6-8	10-6	13-10	17-8	20-11	6-8	10-5	13-2	16-1	18-8
	Spruce-pine-fir	#1	6-6	9-9	12-4	15-1	17-6	5-11	8-8	11-0	13-6	15-7
	Spruce-pine-fir	#2	6-6	9-9	12-4	15-1	17-6	5-11	8-8	11-0	13-6	15-7
	Spruce-pine-fir	#3	5-0	7-4	9-4	11-5	13-2	4-6	6-7	8-4	10-2	11-10

Check sources for availability of lumber in lengths greater than 20 feet.

For SI: 1 inch = 25.4 mm, 1 foot = 304.8 mm, 1 pound per square foot = 0.0479 kN/m^2.

a. The tabulated rafter spans assume that ceiling joists are located at the bottom of the attic space or that some other method of resisting the outward push of the rafters on the bearing walls, such as rafter ties, is provided at that location. When ceiling joists or rafter ties are located higher in the attic space, the rafter spans shall be multiplied by the factors given below:

H_C/H_R	Rafter Span Adjustment Factor
2/3 or greater	0.50
1/2	0.58
1/3	0.67
1/4	0.76
1/5	0.83
1/6	0.90
1/7.5 and less	1.00

where: H_C = Height of ceiling joists or rafter ties measured vertically above the top of the rafter support walls.

H_R = Height of roof ridge measured vertically above the top of the rafter support walls.

b. Span exceeds 26 feet in length.

CEILING JOIST SPAN TABLE

TABLE R802.4(1)
CEILING JOIST SPANS FOR COMMON LUMBER SPECIES
(Uninhabitable attics without storage, live load = 10 psf, L/Δ = 240)

CEILING JOIST SPACING (inches)	SPECIES AND GRADE		DEAD LOAD = 5 psf			
			2 × 4	2 × 6	2 × 8	2 × 10
			Maximum ceiling joist spans			
			(feet - inches)	(feet - inches)	(feet - inches)	(feet - inches)
12	Douglas fir-larch	SS	13-2	20-8	Note a	Note a
	Douglas fir-larch	#1	12-8	19-11	Note a	Note a
	Douglas fir-larch	#2	12-5	19-6	25-8	Note a
	Douglas fir-larch	#3	10-10	15-10	20-1	24-6
	Hem-fir	SS	12-5	19-6	25-8	Note a
	Hem-fir	#1	12-2	19-1	25-2	Note a
	Hem-fir	#2	11-7	18-2	24-0	Note a
	Hem-fir	#3	10-10	15-10	20-1	24-6
	Southern pine	SS	12-11	20-3	Note a	Note a
	Southern pine	#1	12-8	19-11	Note a	Note a
	Southern pine	#2	12-5	19-6	25-8	Note a
	Southern pine	#3	11-6	17-0	21-8	25-7
	Spruce-pine-fir	SS	12-2	19-1	25-2	Note a
	Spruce-pine-fir	#1	11-10	18-8	24-7	Note a
	Spruce-pine-fir	#2	11-10	18-8	24-7	Note a
	Spruce-pine-fir	#3	10-10	15-10	20-1	24-6
16	Douglas fir-larch	SS	11-11	18-9	24-8	Note a
	Douglas fir-larch	#1	11-6	18-1	23-10	Note a
	Douglas fir-larch	#2	11-3	17-8	23-0	Note a
	Douglas fir-larch	#3	9-5	13-9	17-5	21-3
	Hem-fir	SS	11-3	17-8	23-4	Note a
	Hem-fir	#1	11-0	17-4	22-10	Note a
	Hem-fir	#2	10-6	16-6	21-9	Note a
	Hem-fir	#3	9-5	13-9	17-5	21-3
	Southern pine	SS	11-9	18-5	24-3	Note a
	Southern pine	#1	11-6	18-1	23-1	Note a
	Southern pine	#2	11-3	17-8	23-4	Note a
	Southern pine	#3	10-0	14-9	18-9	22-2
	Spruce-pine-fir	SS	11-0	17-4	22-10	Note a
	Spruce-pine-fir	#1	10-9	16-11	22-4	Note a
	Spruce-pine-fir	#2	10-9	16-11	22-4	Note a
	Spruce-pine-fir	#3	9-5	13-9	17-5	21-3
19.2	Douglas fir-larch	SS	11-3	17-8	23-3	Note a
	Douglas fir-larch	#1	10-10	17-0	22-5	Note a
	Douglas fir-larch	#2	10-7	16-7	21-0	25-8
	Douglas fir-larch	#3	8-7	12-6	15-10	19-5
	Hem-fir	SS	10-7	16-8	21-11	Note a
	Hem-fir	#1	10-4	16-4	21-6	Note a
	Hem-fir	#2	9-11	15-7	20-6	25-3
	Hem-fir	#3	8-7	12-6	15-10	19-5
	Southern -pine	SS	11-0	17-4	22-10	Note a
	Southern pine	#1	10-10	17-0	22-5	Note a
	Southern pine	#2	10-7	16-8	21-11	Note a
	Southern pine	#3	9-1	13-6	17-2	20-3
	Spruce-pine-fir	SS	10-4	16-4	21-6	Note a
	Spruce-pine-fir	#1	10-2	15-11	21-0	25-8
	Spruce-pine-fir	#2	10-2	15-11	21-0	25-8
	Spruce-pine-fir	#3	8-7	12-6	15-10	19-5

TABLE R802.4(1)—continued
CEILING JOIST SPANS FOR COMMON LUMBER SPECIES
(Uninhabitable attics without storage, live load = 10 psf, L/Δ = 240)

CEILING JOIST SPACING (inches)	SPECIES AND GRADE		DEAD LOAD = 5 psf			
			2 × 4	2 × 6	2 × 8	2 × 10
			Maximum ceiling joist spans			
			(feet - inches)	(feet - inches)	(feet - inches)	(feet - inches)
24	Douglas fir-larch	SS	10-5	16-4	21-7	Note a
	Douglas fir-larch	#1	10-0	15-9	20-1	24-6
	Douglas fir-larch	#2	9-10	14-10	18-9	22-11
	Douglas fir-larch	#3	7-8	11-2	14-2	17-4
	Hem-fir	SS	9-10	15-6	20-5	Note a
	Hem-fir	#1	9-8	15-2	19-7	23-11
	Hem-fir	#2	9-2	14-5	18-6	22-7
	Hem-fir	#3	7-8	11-2	14-2	17-4
	Southern pine	SS	10-3	16-1	21-2	Note a
	Southern pine	#1	10-0	15-9	20-10	Note a
	Southern pine	#2	9-10	15-6	20-1	23-11
	Southern pine	#3	8-2	12-0	15-4	18-1
	Spruce-pine-fir	SS	9-8	15-2	19-11	25-5
	Spruce-pine-fir	#1	9-5	14-9	18-9	22-11
	Spruce-pine-fir	#2	9-5	14-9	18-9	22-11
	Spruce-pine-fir	#3	7-8	11-2	14-2	17-4

Check sources for availability of lumber in lengths greater than 20 feet.
For SI: 1 inch = 25.4 mm, 1 foot = 304.8 mm, 1 pound per square foot = 0.0479 kN/m^2.
a. Span exceeds 26 feet in length.

HEADER TABLE FOR USE WITH EASY PLAN ABOVE

TABLE R502.5(1)
GIRDER SPANS[a] AND HEADER SPANS[a] FOR EXTERIOR BEARING WALLS
(Maximum spans for Douglas fir-larch, hem-fir, southern pine and spruce-pine-fir[b] and required number of jack studs)

GIRDERS AND HEADERS SUPPORTING	SIZE	GROUND SNOW LOAD (psf)[e]											
		30						50					
		Building width[c] (feet)											
		20		28		36		20		28		36	
		Span	NJ[d]	Span	NJ[d]	Span	NJ[d]	Span	NJ[d]	Span	NJ[d]	Span	NJ[d]
Roof and ceiling	2-2×4	3-6	1	3-2	1	2-10	1	3-2	1	2-9	1	2-6	1
	2-2×6	5-5	1	4-8	1	4-2	1	4-8	1	4-1	1	3-8	2
	2-2×8	6-10	1	5-11	2	5-4	2	5-11	2	5-2	2	4-7	2
	2-2×10	8-5	2	7-3	2	6-6	2	7-3	2	6-3	2	5-7	2
	2-2×12	9-9	2	8-5	2	7-6	2	8-5	2	7-3	2	6-6	2
	3-2×8	8-4	1	7-5	1	6-8	1	7-5	1	6-5	2	5-9	2
	3-2×10	10-6	1	9-1	2	8-2	2	9-1	2	7-10	2	7-0	2
	3-2×12	12-2	2	10-7	2	9-5	2	10-7	2	9-2	2	8-2	2
	4-2×8	7-0	1	6-1	2	5-5	2	6-1	2	5-3	2	4-8	2
	4-2×10	11-8	1	10-6	1	9-5	2	10-6	1	9-1	2	8-2	2
	4-2×12	14-1	1	12-2	2	10-11	2	12-2	2	10-7	2	9-5	2
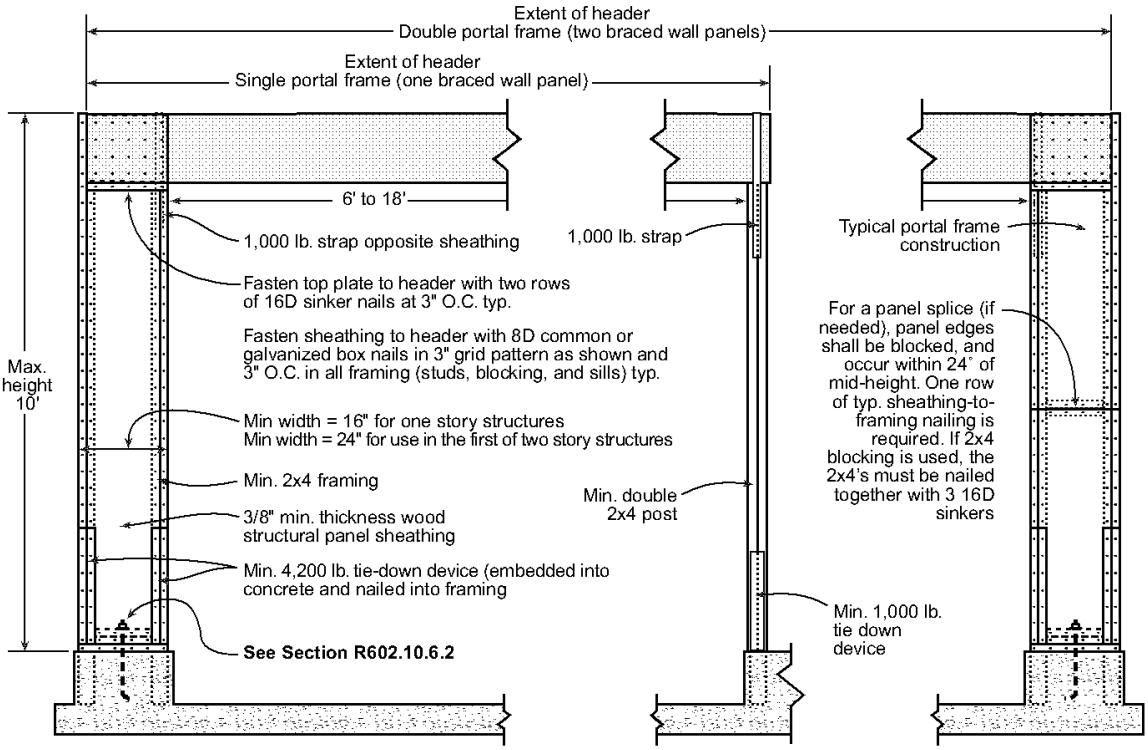
WALL BRACING AT LARGE DOOR OPENINGS